FENDER "VIBROLUX" SCHEMATIC
MODEL 6G11-A D-FB

CIRCUIT PATENT #2817708

NOTICE
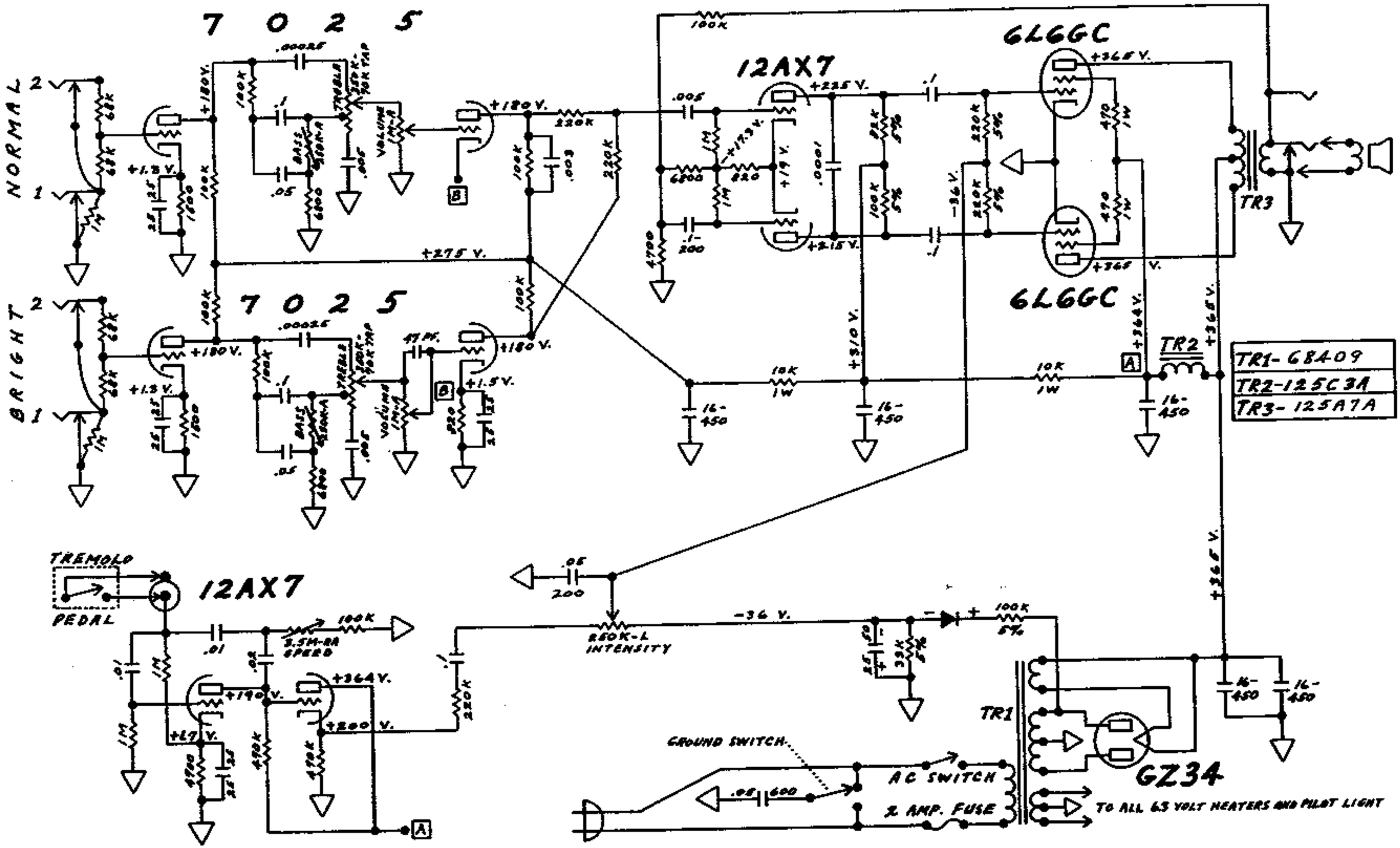
1- VOLTAGES READ TO GROUND WITH ELECTRONIC VOLTMETER. VALUES SHOWN + OR - 20%.
2- ALL RESISTORS 1/2 WATT, 10% TOLERANCE IF NOT SPECIFIED.
3- ALL CAPACITORS AT LEAST 400 VOLT RATING IF NOT SPECIFIED.